REVISIONS				
ZONE	REV.	DESCRIPTION	APPROVED	DATE

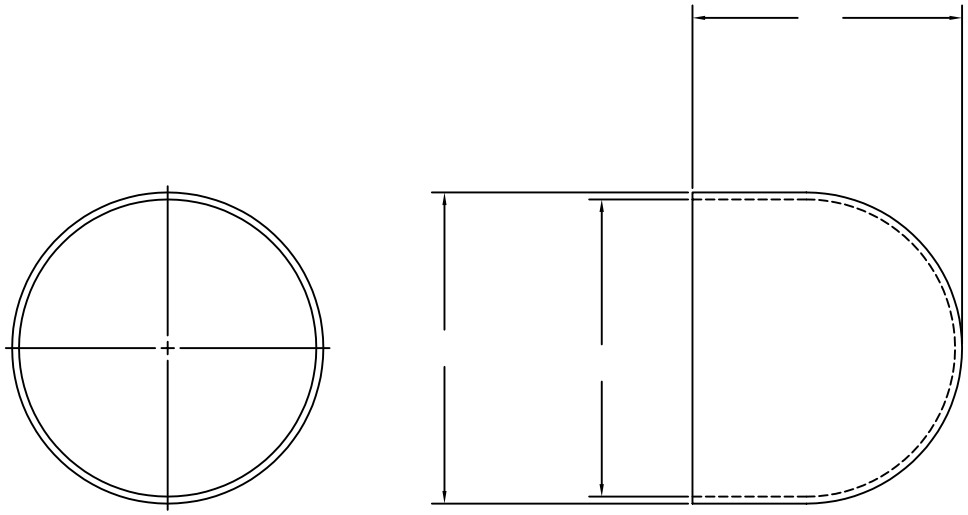

UOS	TOLERANCES
DECIMAL INCHES	MILLIMETERS
X.X = +/-.050	X = +/- 1
X.XX = +/-.010	X.X = +/-.5
X.XXX = +/-.005	X.XX = +/-.15
ANGULARITY +/- 1°	

PROPRIETARY

THE INFORMATION CONTAINED HEREIN IS THE PROPERTY OF UNITED SILICA PRODUCTS INC., AND MAY NOT BE REPRODUCED OR DISCLOSED IN WHOLE OR IN PART WITHOUT THE WRITTEN PERMISSION OF UNITED SILICA PRODUCTS INC.

FILE NAME: TITLEB.DWG

UNITED SILICA PRODUCTS, INC.
3 PARK DRIVE, FRANKLIN, NEW JERSEY 07416
PH (973) 209-8854 FAX (973) 209-8864
E-MAIL quartzsales@unitedsilica.com

TITLE PLUG		
CUST.	DWG NO.	REV.
MATERIAL QUARTZ	DRAWN BY	
	APPROVED BY	
SCALE NONE	SHEET	DATE